The National HVDC Centre

HVDC Operators' Forum 2022

University of Strathclyde Glasgow

Impact of Converters' Control on Power System Protection and Potential Mitigating Solutions

Dr Qiteng Hong

q.hong@strath.ac.uk

Senior Lecturer

University of Strathclyde

22/06/2022

Overview

University of Strathclyde Glasgow

- Background and motivation
- Impact of converters' control strategies on distance protection performance
  - Grid-Following Converters (GFL)
- Potential mitigating solutions for the observed protection issues
  - Grid-Forming Converters (GFM) with virtual impedance FRT
  - Travelling wave protection
- Conclusions

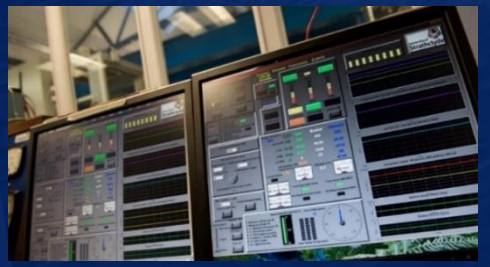

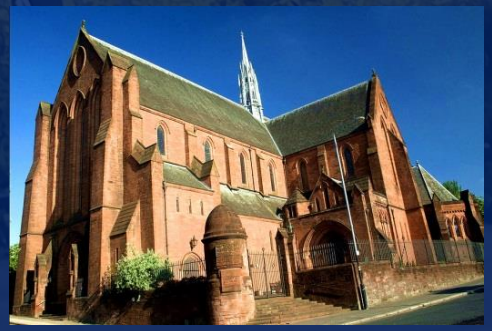

Research Background and Motivation

- **Ambitious plans for renewable integration to meet decarbonisation targets**
- **Massive changes to system behaviour during faults**
  - Reduced fault level
  - Changed fault characteristics – dependent on converter control strategies
- **Various new control concepts being proposed without adequate consideration of impact on protection**
- **Essential to understand how different control strategies will affect existing distance protection to:**
  - Avoid undesirable control design and grid code requirements
  - Inform protection algorithm refinement

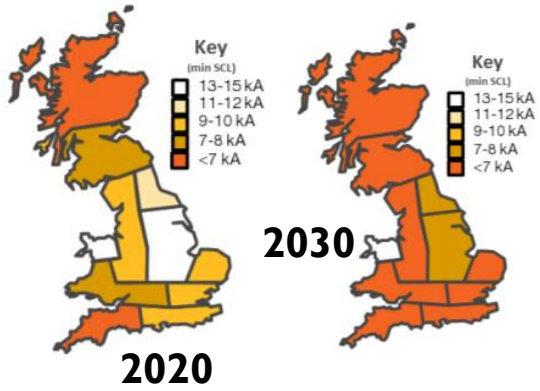

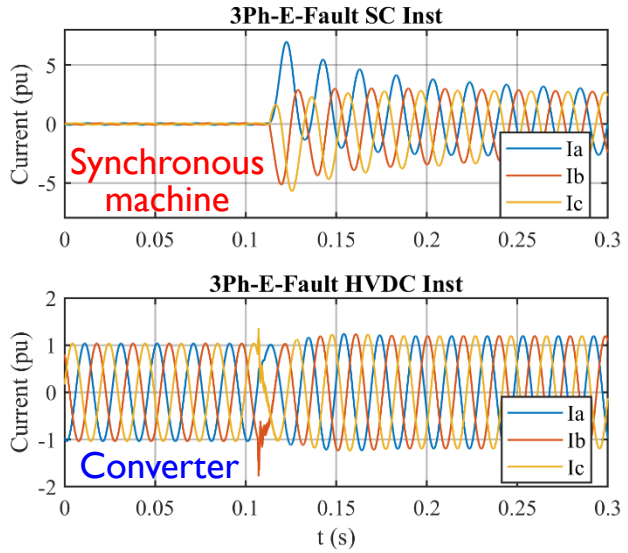

Funded by:

The National HVDC Centre

Scottish & Southern Electricity Networks

University of Strathclyde Glasgow

Grid-Following Converters' Impact on Distance Protection Performance

Overview of the Developed GFL

- Different control modes implemented:
  - Balanced current
  - Constant active power
  - Constant reactive power
- Grid code compliant mode: grid-code based positive-sequence reactive current injection

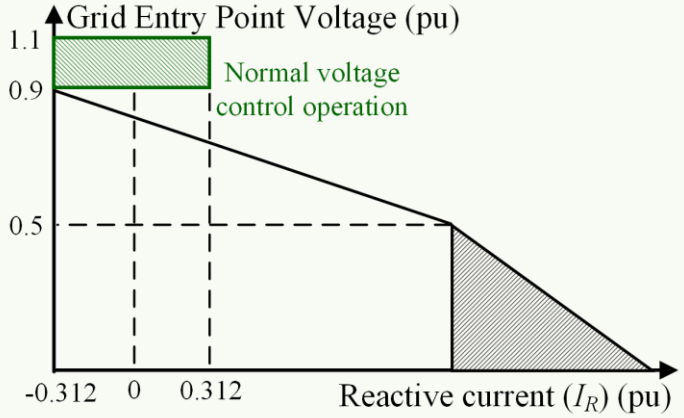

- Negative sequence current injection: varied levels of the negative sequence current can be injected

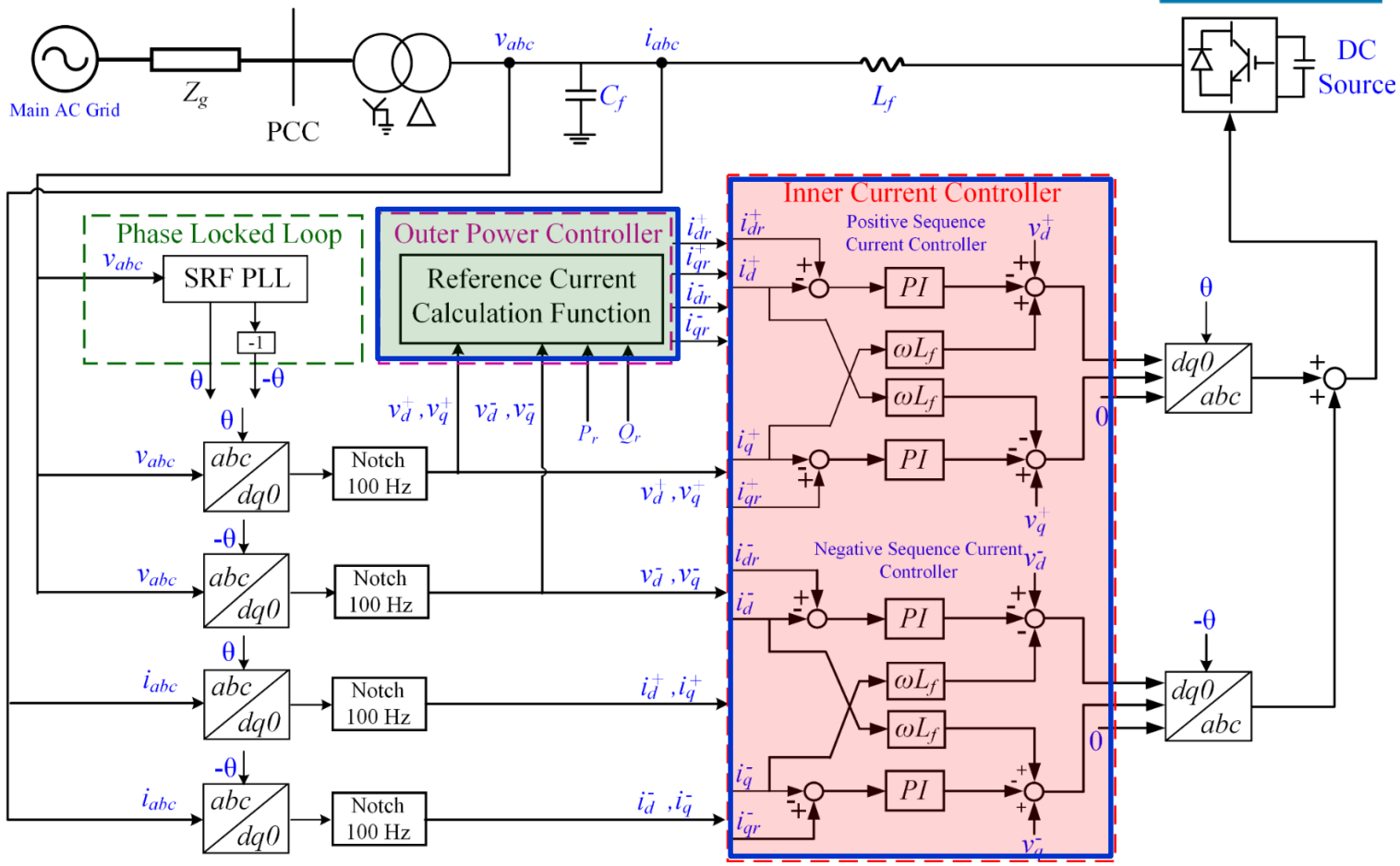

Overview of the Developed GFL

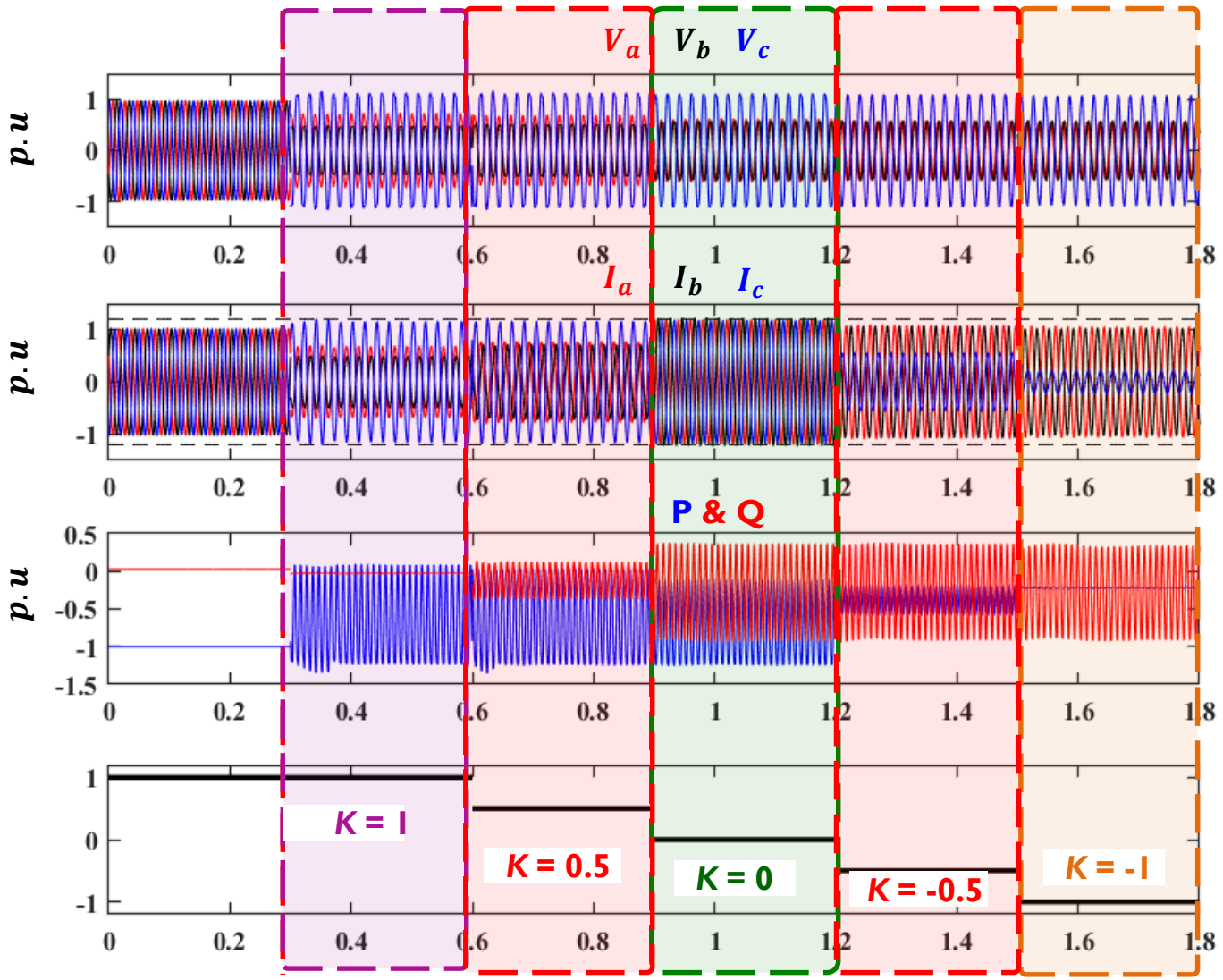

Performance of HVDC station under AG fault

- Flexible controller to realise different control modes
  - K = 0: balanced current (grid code)
  - K = 1: constant Q
  - K = -1: constant P
- Amount of negative sequence current injection also controllable by K.
- Satisfy the requirement of Fault Ride Through (FRT): limit current magnitude to 1.2 pu and inject the reactive current by following grid code

HIL Tests of Distance Protection

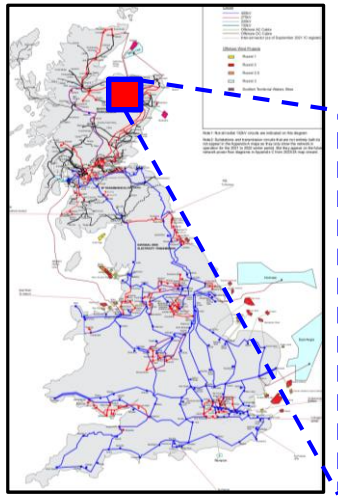

Case study: AC network near Caithness-Moray HVDC Link

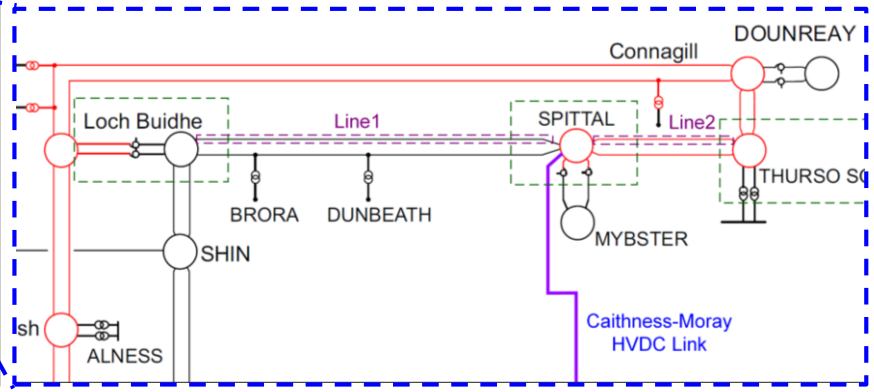

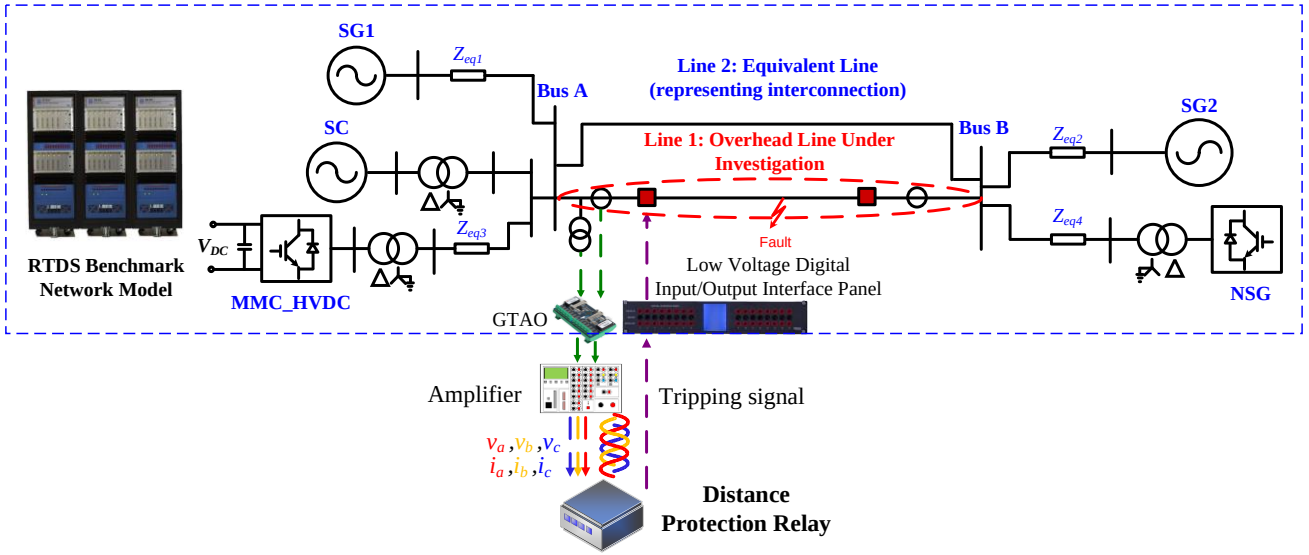

Parameter	Test Settings
FL_{SG1}	0 MVA / 1836 MVA
FL_{SG2}	3000 MVA / 1372 MVA
SC	0 MVA / 300 MVA
HVDC	839 MVA ($Pf = 1$); CP, BI, CQ
Fault	AG, AB ; 2 Ω ; 20 %, 70 %, 75 %, 80%, 85%
Characteristic	MHO, Quad
NSG	839 MVA ($Pf = 0.93$)
Load	300 MVA ($Pf = 0.9$)

System Strength Impact

SC Impact

Controller Impact

Fault Type and Position

Protection Characteristic Impact

HIL Testing Cases:

- Two different commonly used relays
- 480 cases in total
- Scripts developed for automated simulation, relay injection and results analysis

Operating Principle of Distance Protection

MHO Characteristic

➢ Self-Polarised MHO

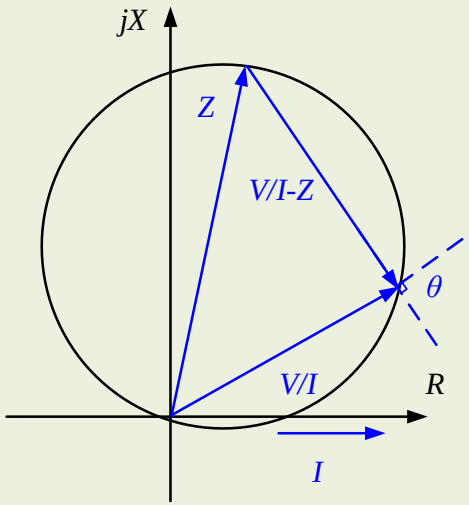

➢ Memory-Polarised MHO

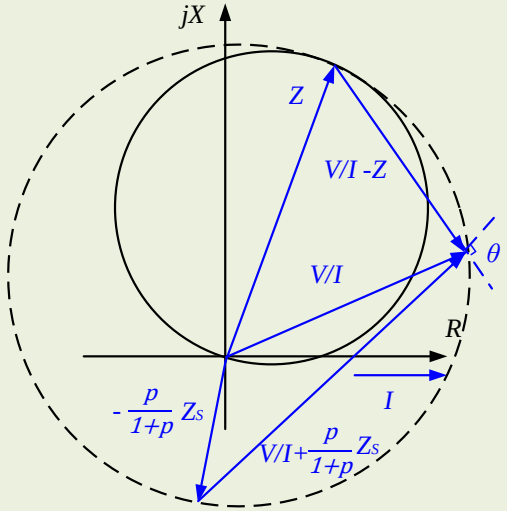

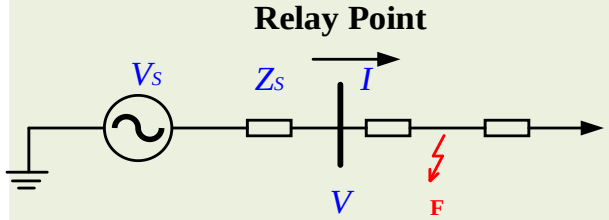

Phase Comparator:

$$S_1 = V + pV_{mem} \quad S_2 = V - IZ_r$$

- V_{mem} : memory-polarised voltage
- p: polarising factor, typically from 0.2 to 5

Tripping condition

- Larger p and *Zs*, larger expansion of zone.
- $\theta > 90^{\circ}$, relay operates

QUAD Characteristic

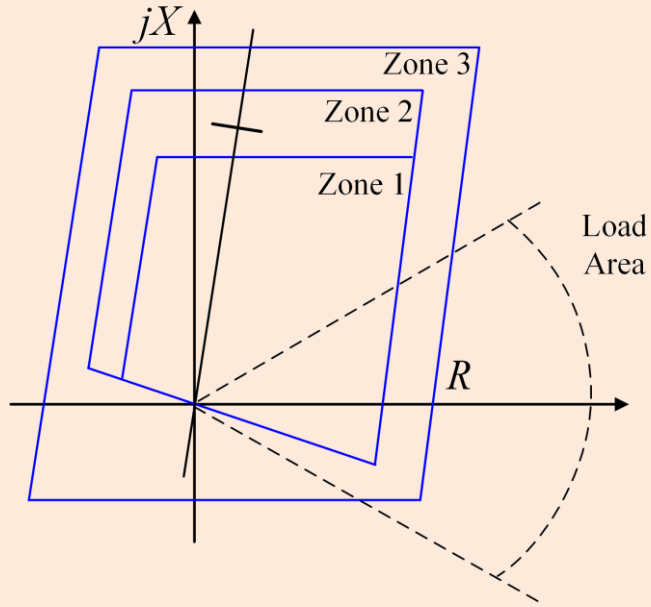

Tripping condition: Measured Z_M within corresponding zone boundary

Other tripping conditions for both MHO and QUAD:

- Time delay
- Starting element
- Faulty phase selection

Overview of the Distance Relay Performance

Statistics of all tested cases:

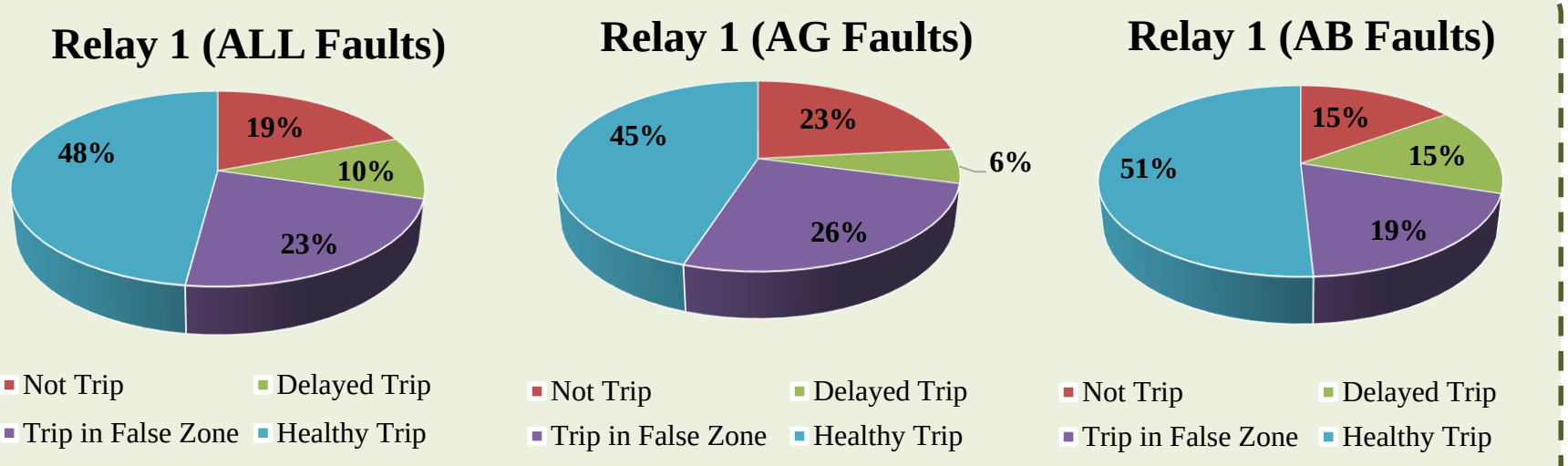

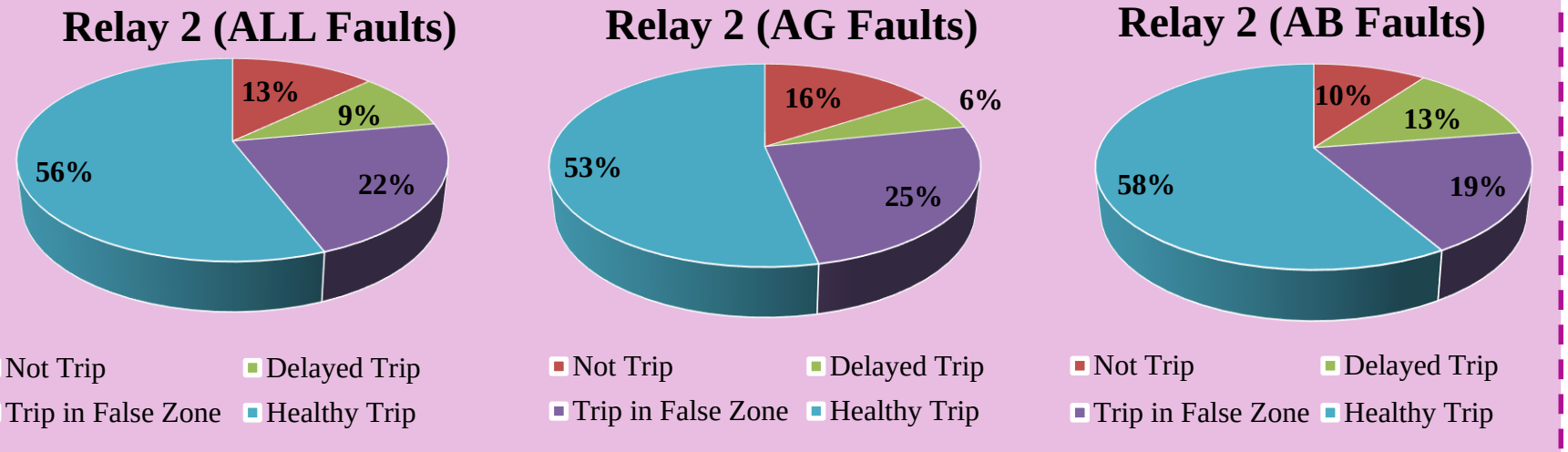

- Healthy Trip (<90ms)
- Delay Trip (>90ms)
- Trip in False Zone
- No Trip

Observations:

- Compromised protection performance observed in both relays
- Breakdown of percentages of performance is similar.
- Cases with no/delayed tripping are particularly alarming
- Only a general picture of statistics here.

Impact of Local and Remote-end Fault Level

Current fault level in real system

$FL_{SG1} = 1832$ MVA, $FL_{SG2} = 1372$ MVA

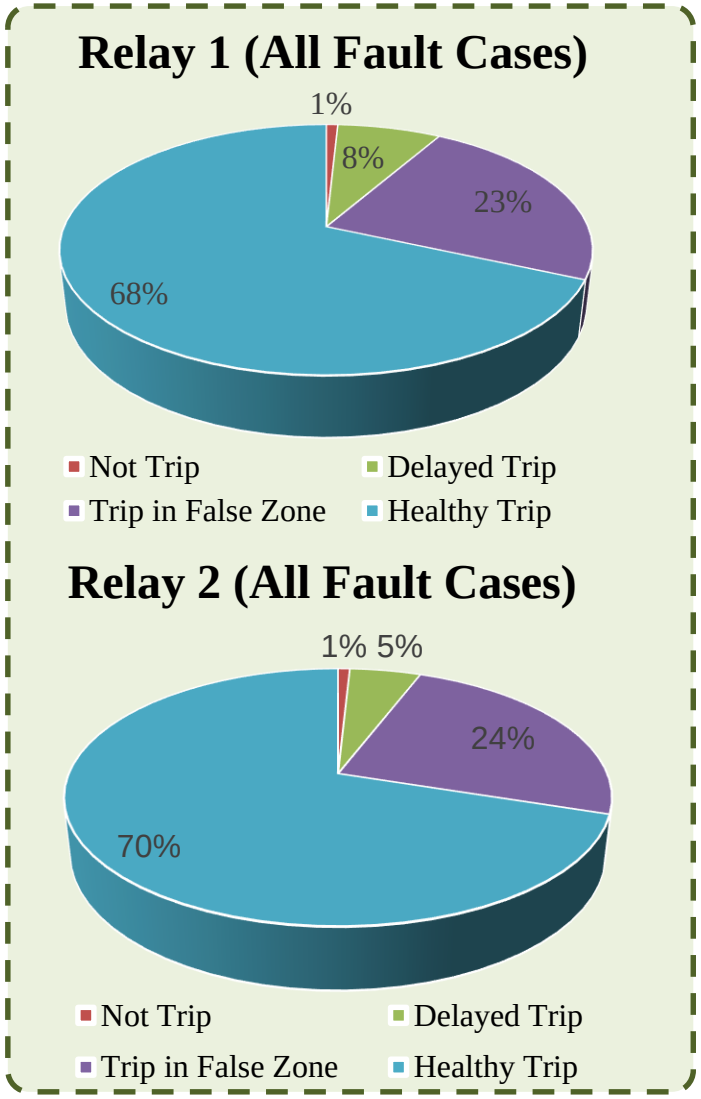

Potential future extreme scenario

$FL_{SG1} = 0$ MVA, $FL_{SG2} = 3000$ MVA

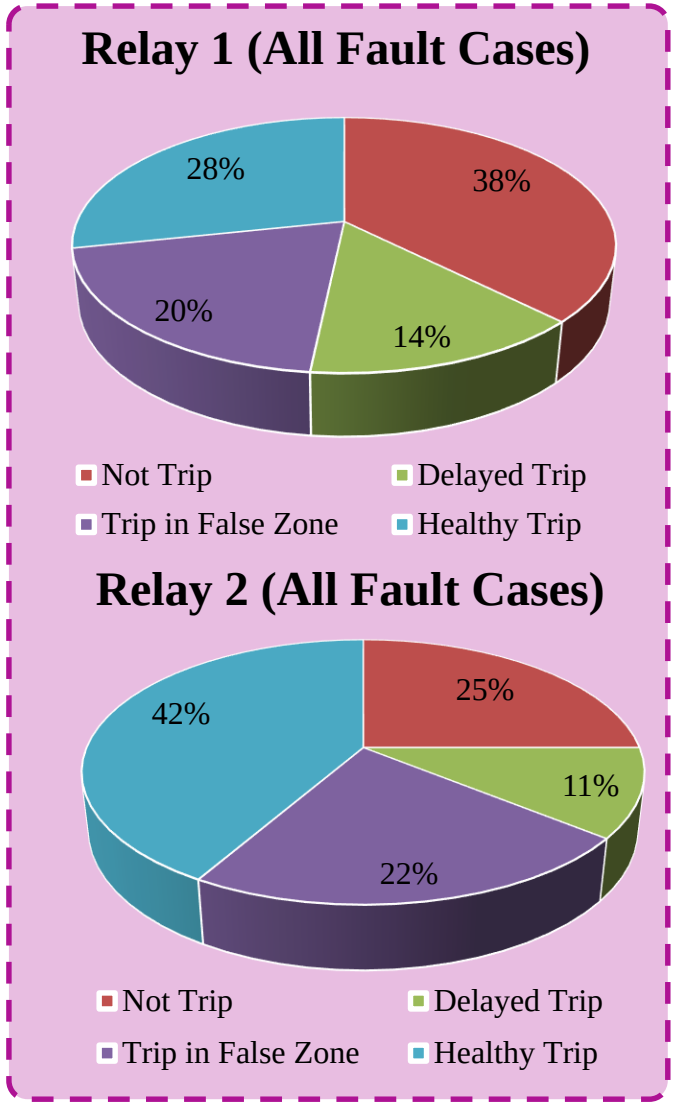

- **Healthy Trip (<90ms)**
- **Delay Trip (>90ms)**
- **Trip in False Zone**
- **No Trip**

Observations:

- At current fault level – relays responds correctly in majority of the cases.
- Small number of cases with delay and no trip – due to specific HVDC control deployed.
- When local fault infeed from SG1 drops to 0MVA, i.e. only HVDC feeding the fault, clear change of protection performance observed.

Impact of HVDC Control Mode (ALL Fault Cases)

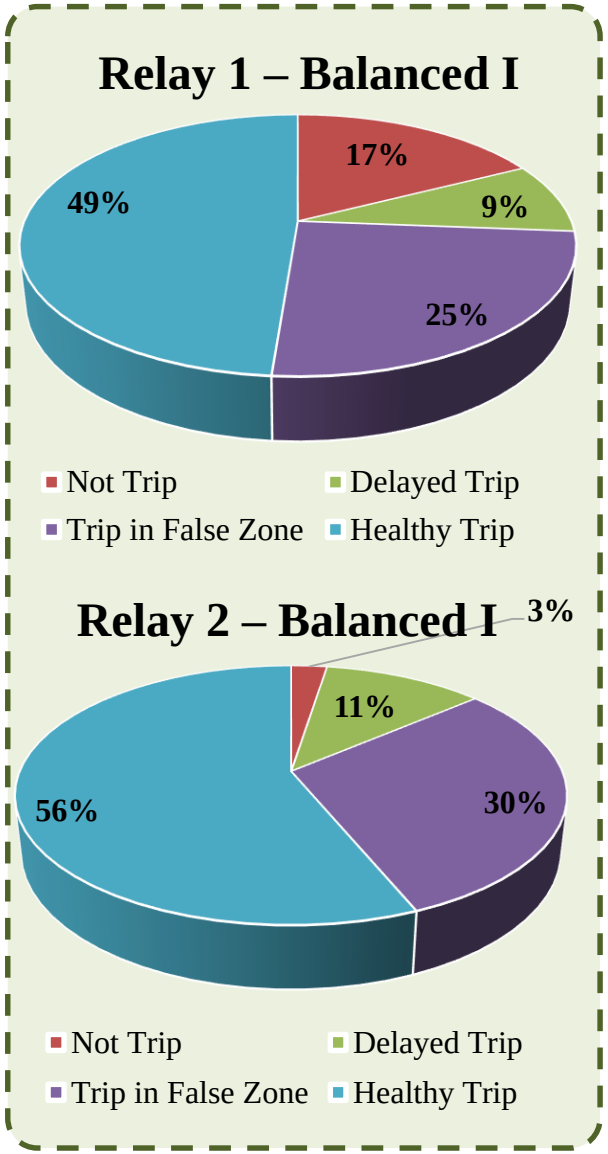

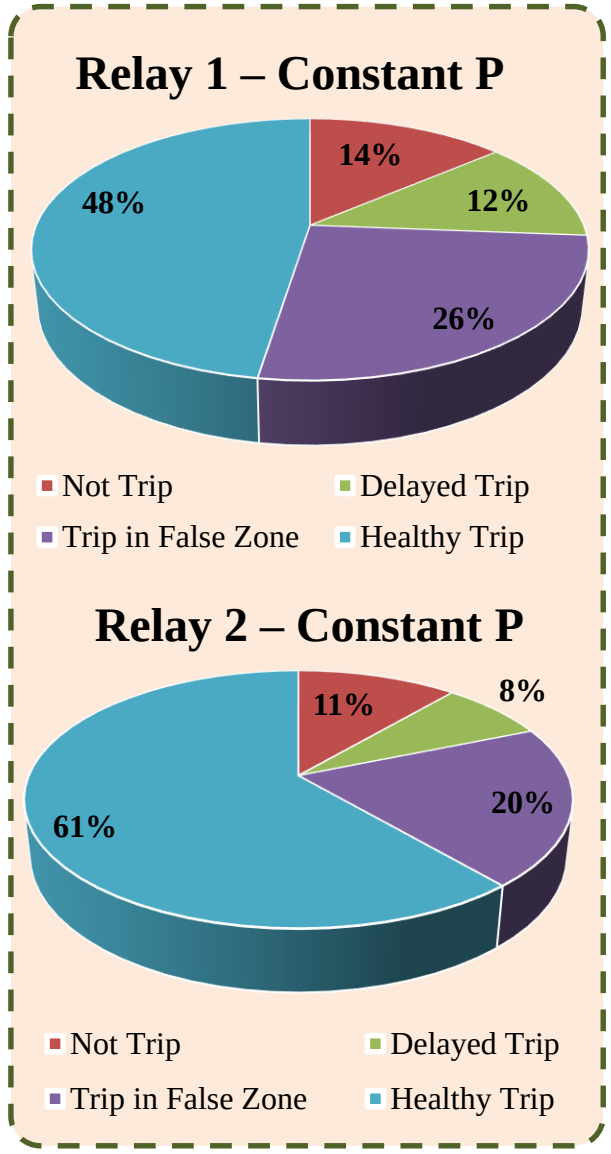

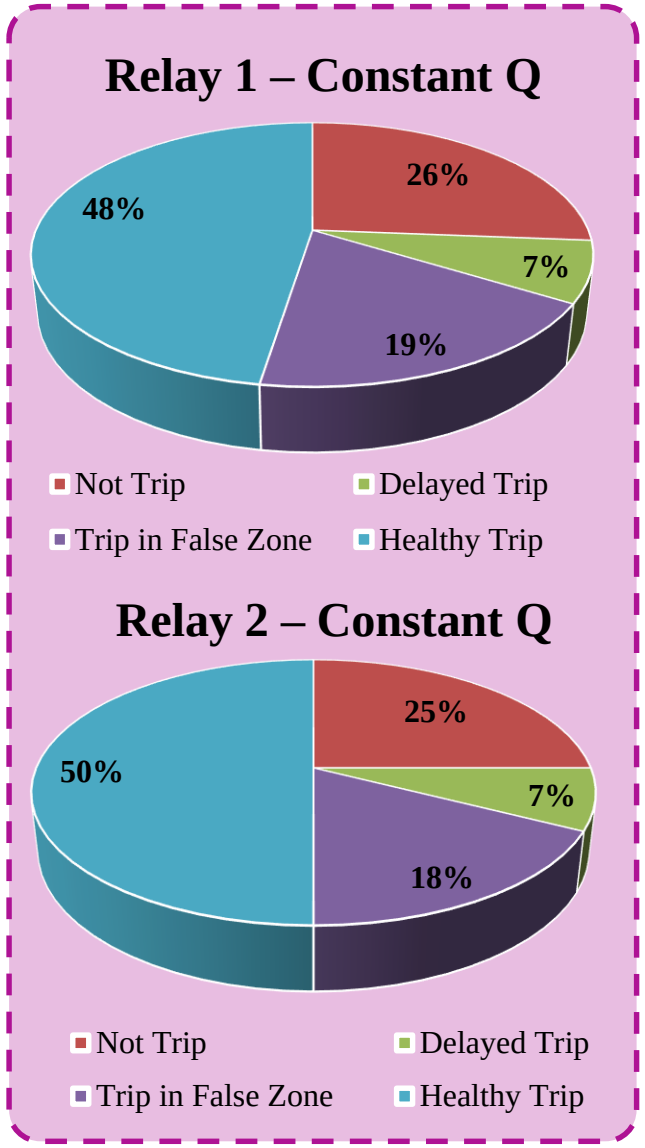

- Healthy Trip (<90ms)
- Delay Trip (>90ms)
- Trip in False Zone
- No Trip

Observations:

Constant Q mode seems to have most severe impact on the protection performance.

Results Analysis – Phase Selection Issue

Cases 3:

Case	FL_{SG1}	FL_{SG2}	HVDC Modes	Fault (15%)
3	0 MVA	3000 MVA	BI	AG, 2 Ω, 15%

Case	Relay 1		Relay 2	
	Relay Trips?	Tripping Time	Relay Trips ?	Tripping Time
3	NO	NA	YES	100 ms

- Relay 1:

All delta-quantities are greater than the threshold – failed

- Relay 2

Current vector in the false area – failed
Voltage vector in the correct area – success but with delay

Relay 1

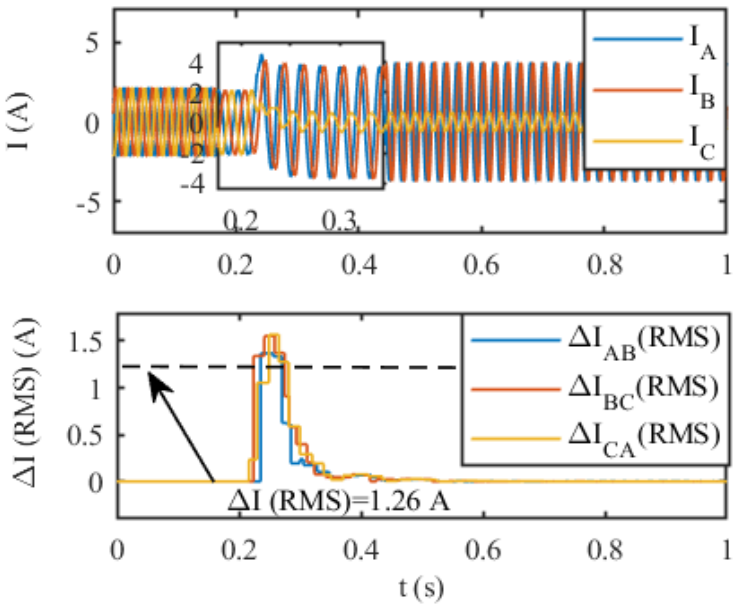

Relay 2

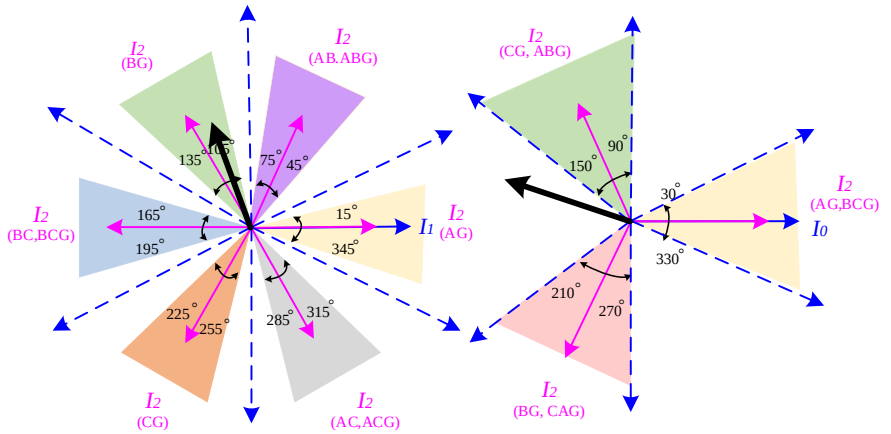

Current based Sequence Components

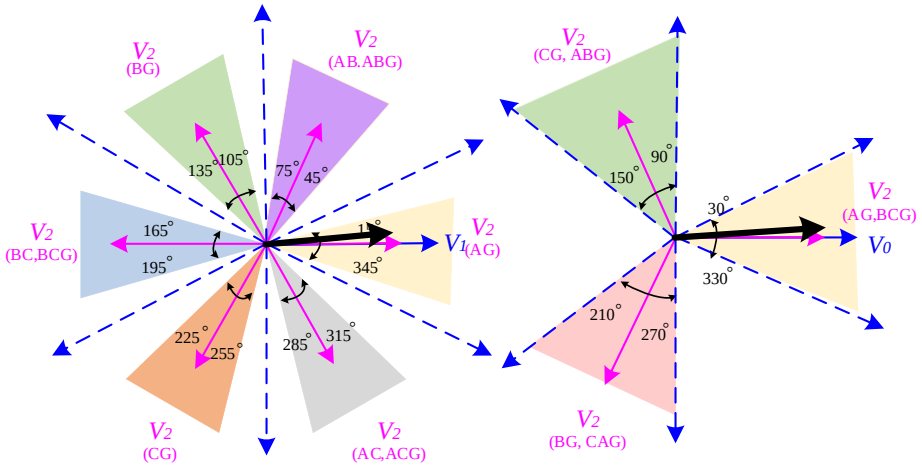

Voltage based Sequence Components

Results Analysis – Over-reach Issue

Cases 6:

Case	FL_{SG1}	FL_{SG2}	HVDC Modes	Fault (15%)
6	0 MVA	3000 MVA	BI	AB, 2 Ω, 15%

Case	Relay 1		Relay 2	
	Relay Trips?	Tripping Time	Relay Trips ?	Tripping Time
6	NO	NA	YES	43 ms

- Impedance locus are on the reverse side of the protective zone – several over-reach issues

$$Z_M = \frac{\dot{I}_L \times Z_L + (\dot{I}_L + \dot{I}_R) R_F}{\dot{I}_L} = Z_L + (1 + \frac{\dot{I}_R}{\dot{I}_L}) R_F = Z_L + Z_E$$

$$A = |A| \angle \Delta\psi$$

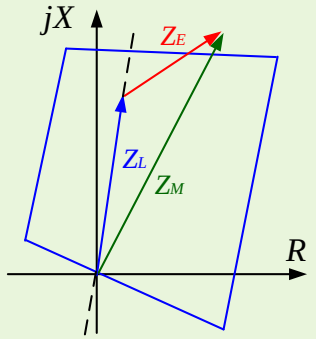

Under-reach issue with $\Delta\psi \in (0^\circ, 180^\circ)$

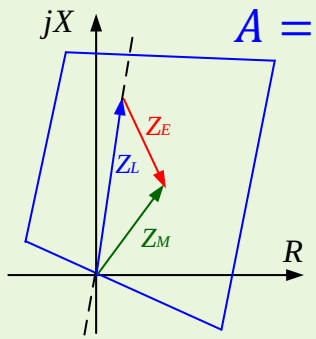

Over-reach issue with $\Delta\psi \in (180^\circ, 360^\circ)$

Locus of both relays

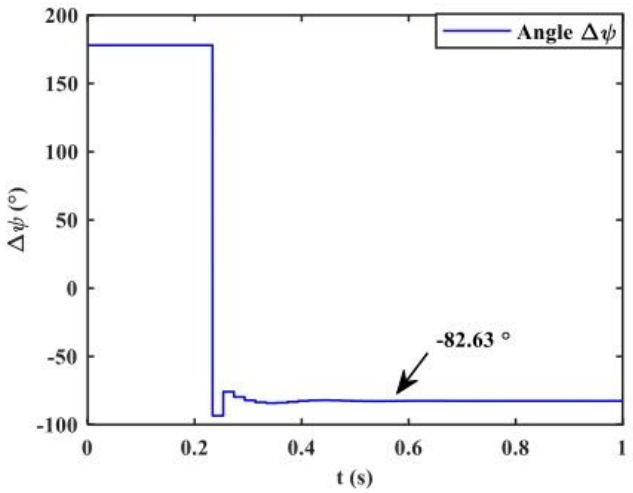

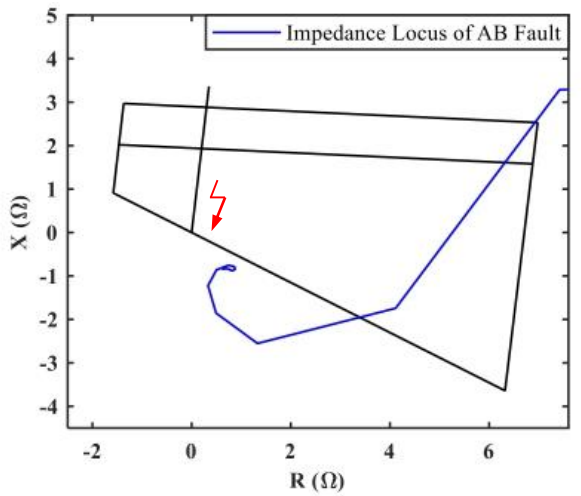

Analysed Network

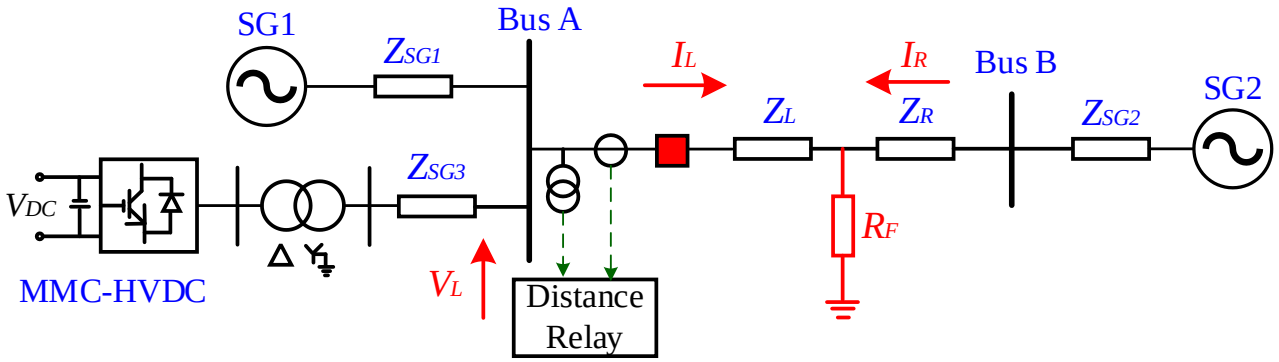

Results Analysis – Oscillating Impedance Locus

Cases 10:

Case	FL_{SG1}	FL_{SG2}	HVDC Modes	Fault (15%)
10	0 MVA	3000 MVA	BI	ABCG, 2 Ω, 15%

Case	Relay 1		Relay 2	
	Relay Trips?	Tripping Time	Relay Trips?	Tripping Time
10	YES	468 ms	YES	50 ms

- A severe oscillation is observed in the measured impedance locus, caused by the varied angle difference of the infeed fault currents.
- Severe voltage depression led to PLL compromised tracking performance, further causing the oscillating ratio of i_q^+ / i_d^+.
- Could result in zone discrimination issue.

HVDC Terminal Voltage $\left(\frac{V_f}{V_{pre}} = 9.7\%\right)$

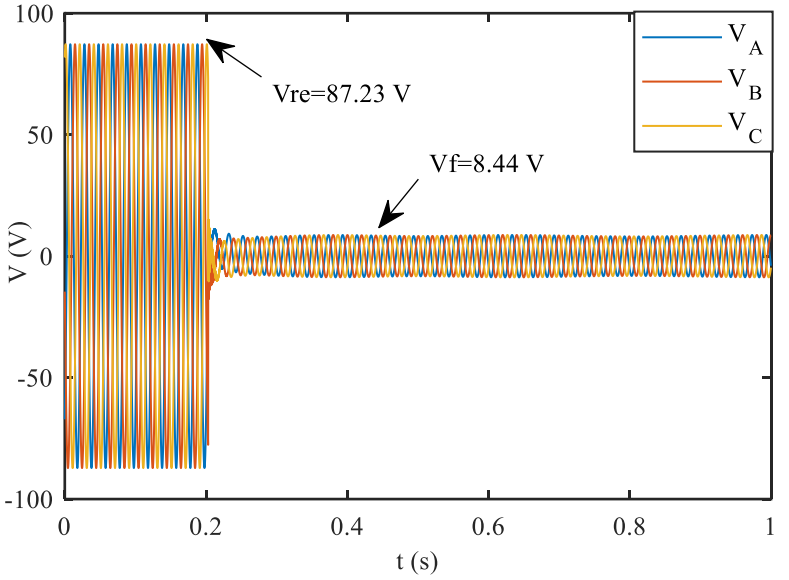

Measured impedance locus

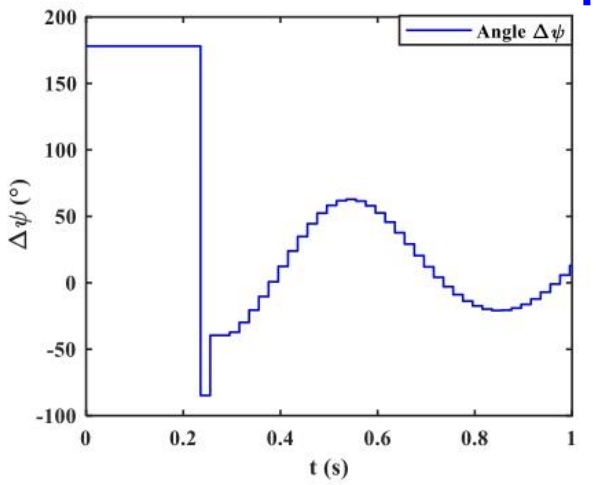

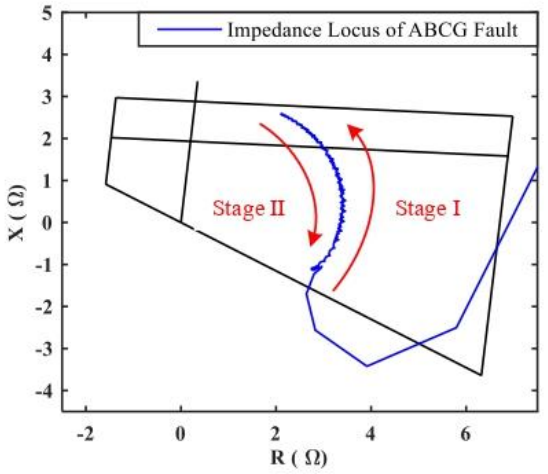

NIA Project - Protection Solutions (3 years)

- **Revised converter control to facilitate distance protection operation**

- **Lab testing of protection solutions (until June 2023)**
  - Travelling wave protection
  - Distance protection (revised algorithms)
  - Neutral current differential protection
  - Differential protection

- **Field trial in substations (Jul 2023-Feb 2025)**
  - Focus on low fault level and converter-concentrated area in Scotland
  - Selected protection solutions based on lab testing will be trialled

University of Strathclyde Glasgow

Facilitating Protection via Refined Converter Control

Grid-Forming Converters (GFM) with Virtual Impedance Control

Modelling of the GFM Converter

❑ GFM with virtual impedance-based FRT – Revised version based on [1]

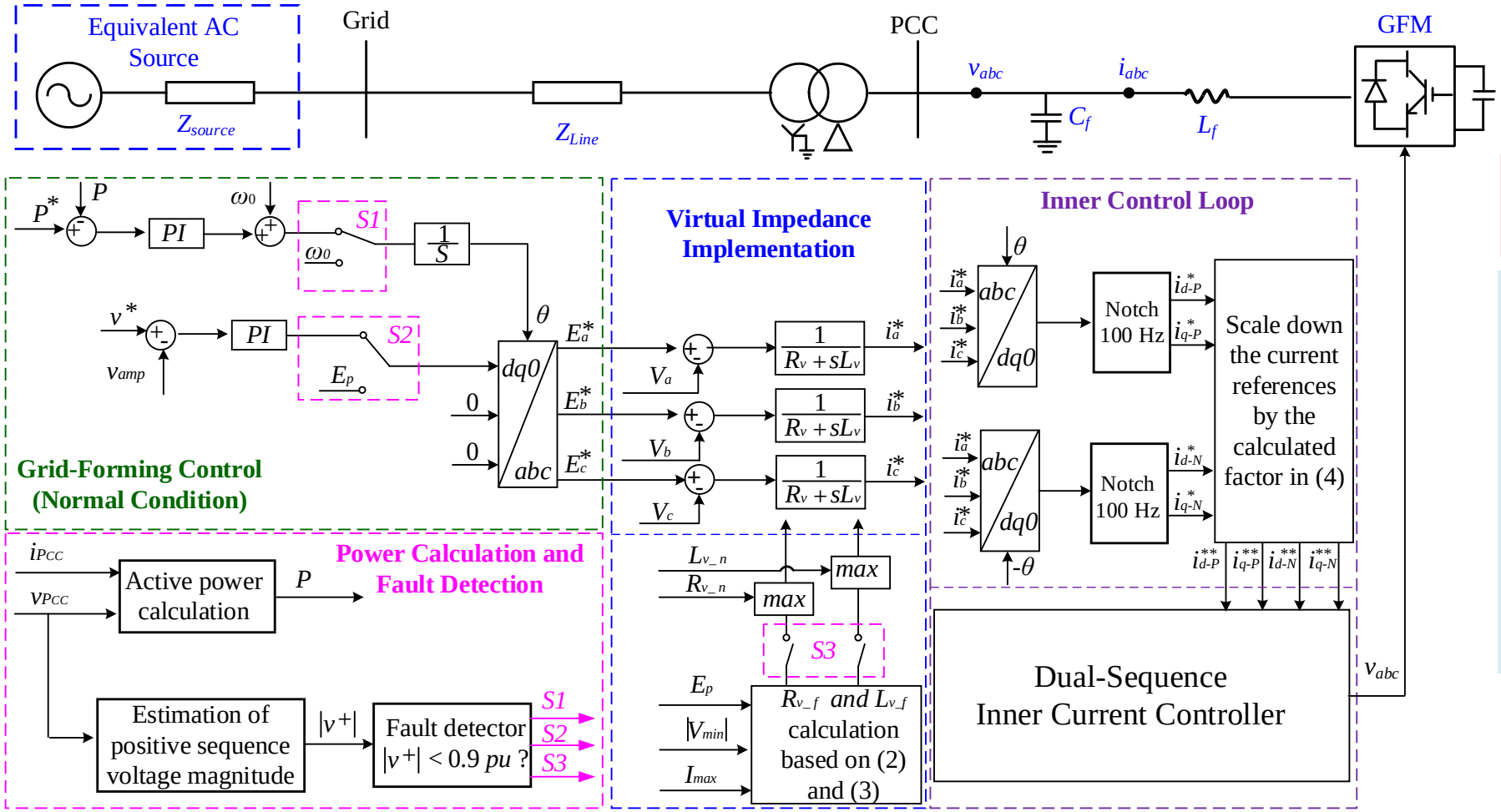

Normal condition:
Control voltage angle and magnitude at PCC

Fault detector:
Control signal 'S1', 'S2' and 'S3'

Virtual impedance FRT
Calculation the virtual impedance during faults by (1) to (3):

$$Z_{v_f} = \frac{E_p - |V_{min}|}{I_{max}} \quad (1)$$

$$R_{v_f} = \frac{Z_{v_f}}{\sqrt{XR_{ratio}^2 + 1}} \quad (2)$$

$$L_{v_f} = \frac{(XR_{ratio} \cdot R_{v_f})}{\omega_0} \quad (3)$$

Inner control loop:
Largely suppress the initial transient currents during faults

$$SF = \frac{\sqrt{(i_{d-P}^*)^2 + (i_{q-P}^*)^2} + \sqrt{(i_{d-N}^*)^2 + (i_{q-N}^*)^2}}{I_{max}} \quad (4)$$

[1] R. Rosso, S. Engelken and M. Liserre, "On The Implementation of an FRT Strategy for Grid-Forming Converters Under Symmetrical and Asymmetrical Grid Faults," in *IEEE Transactions on Industry Applications*, vol. 57, no. 5, pp. 4385-4397, Sept.-Oct. 2021.

Case Studies of GFM's Impact on Distance Protection

❑ Network diagram used for the test

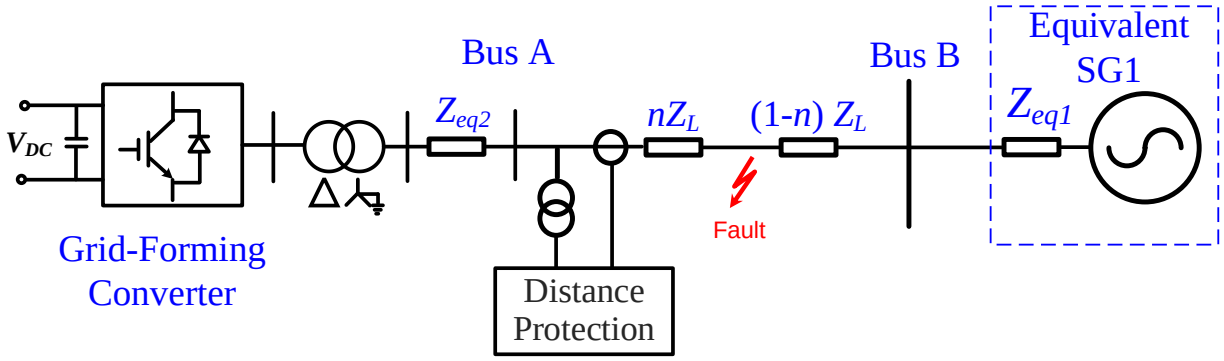

❑ System Parameters

Parameters	Values
V_{LL} (kV)	275
L (kM)	12.1
R_1,R_0 (Ω)	0.458,1.922
X_{L1},X_{L0} (Ω)	5.033,12.17
R_{VT},R_{CT}	275000/110; 1200/1

❑ Information of the studied cases

Cases	S_{HVDC}	FL_{SG1}	Fault Condition
1	839 MVA	3000 MVA	AG, 15%, 2 Ω
2	839 MVA	3000 MVA	AB, 15%, 2 Ω
3	839 MVA	3000 MVA	ABCG, 15%, 2 Ω

- Previous results from GFLs: CC-based FRT could lead to issues of phase-selection, under/over-reach and zone discrimination.
- VI-based FRT is applied for GFM in cases with identified issues:
  - Case 1: faulted phase selection
  - Case 2: under/over-reach
  - Case 3: zone discrimination issue

Impact of GFM on Distance Protection

❑ Case 1

Cases	S_{HVDC}	FL_{SG1}	FRT	Fault (15%)
1	839 MVA	3000 MVA	CC/VI	AG, 2 Ω

❑ Observations of Case 1

- **Impedance locus:**
  - Theoretical impedance value: $Z^* = 0.998+j0.36\ \Omega$
  - GFM mitigates the over-reach issues compared to the GFL with CC-based FRT strategy (grid code).

- **Phase selection (Superimposed currents):**
  - Phase selection realised by comparing the magnitude of ph-ph superimposed currents, i.e., ΔI_{ab}, ΔI_{bc} and ΔI_{ca}.
  - **GFL (CC-based FRT):** ΔI_{ab}, ΔI_{bc} and ΔI_{ca} are all large than threshold – problem for phase selection
  - **GFM (VI-based FRT):** only ΔI_{ab}, ΔI_{ca} magnitudes are greater than threshold.

Impedance locus of distance relay

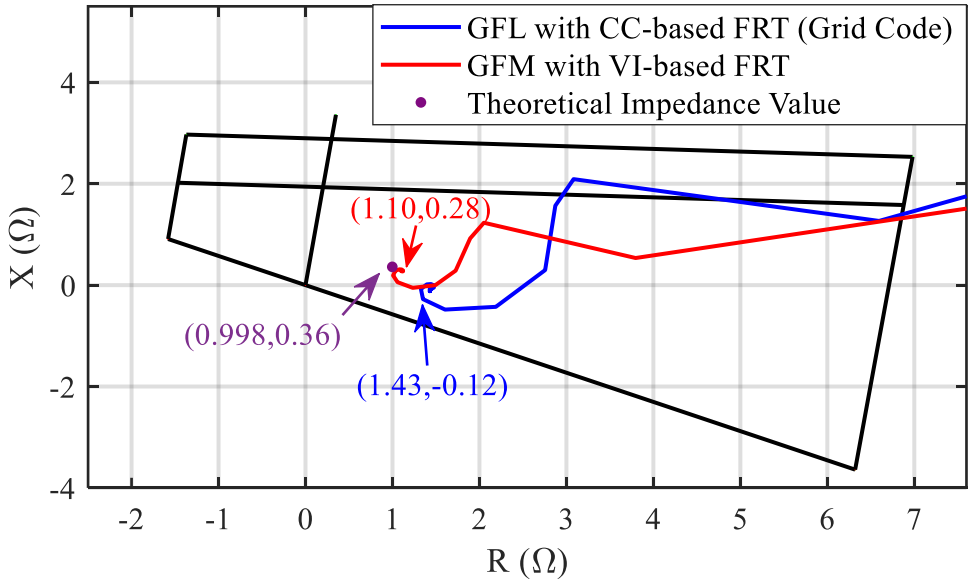

Impact of GFM on Distance Protection

❑ Case I

Cases	S_{HVDC}	FL_{SG1}	FRT	Fault (15%)
1	839 MVA	3000 MVA	CC/VI	AG, 2 Ω

❑ Observations of Case I

- Impedance locus:
  - Theoretical impedance value: $Z^* = 0.998+j0.36\ \Omega$
  - GFM mitigates the over-reach issues compared to the GFL with CC-based FRT strategy (grid code).

- Phase selection (Superimposed currents):
  - Phase selection realised by comparing the magnitude of ph-ph superimposed currents, i.e., ΔI_{ab}, ΔI_{bc} and ΔI_{ca}.
  - **GFL (CC-based FRT):** ΔI_{ab}, ΔI_{bc} and ΔI_{ca} are all large than threshold – problem for phase selection
  - **GFM (VI-based FRT):** only ΔI_{ab}, ΔI_{ca} magnitudes are greater than threshold.

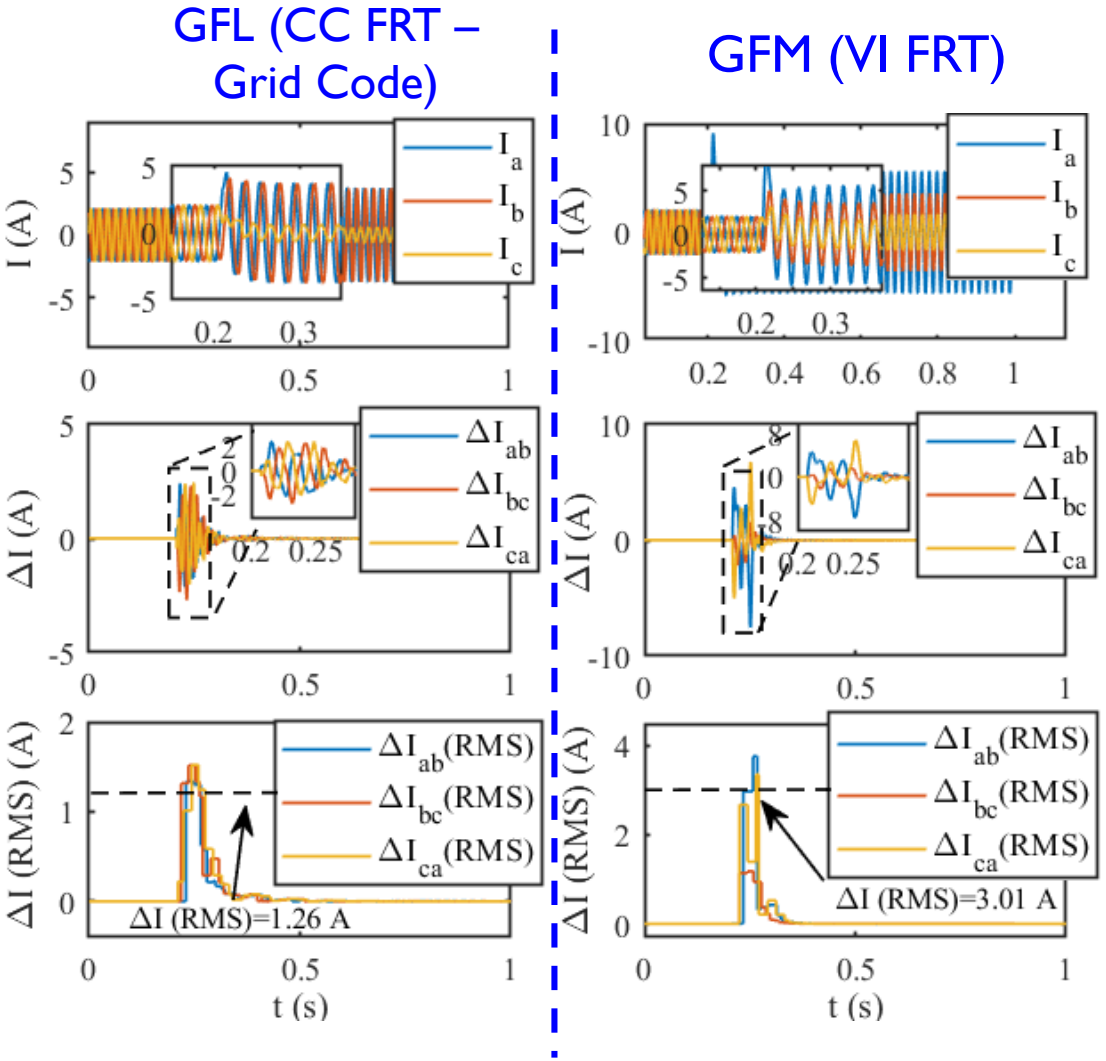

Impact of GFM on Distance Protection

❑ Information of Case 2

Cases	S_{HVDC}	FL_{SG1}	GFM FRT	Fault (15%)
2	839 MVA	3000 MVA	VI	AB, 2 Ω

❑ Observations of Case 2

- Impedance locus:
  - Theoretical impedance value: $Z^* = 0.998+j0.36\ \Omega$
  - **GFL (CC-based FRT):** measured impedance on the reverse side of protective zone - failure in detecting the fault.
  - **GFM (VI-based FRT):** measured impedance inside the protective zone, thus mitigating the previous issue.

- Angle difference of current from the two ends of the protective line**:**
  - **GFL (CC-based FRT):** large angle difference, $\Delta\Psi = -81.81^{\circ}$.
  - **GFM (VI-based FRT):** smaller angle difference, $\Delta\Psi = -38.25^{\circ}$

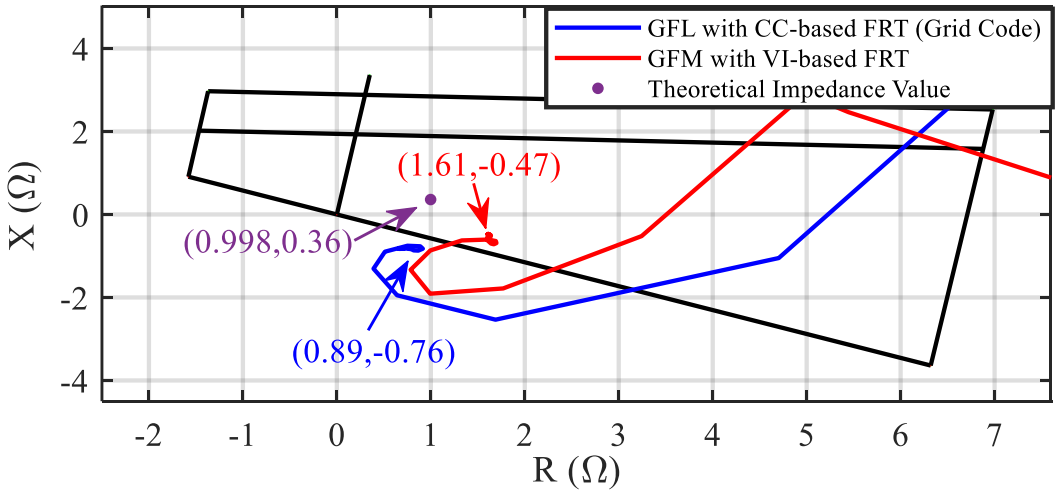

(a)

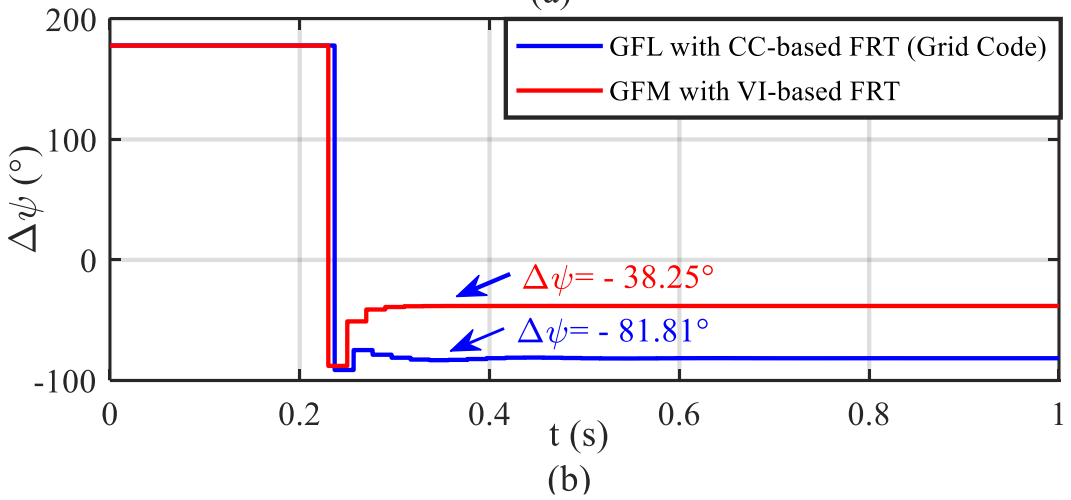

(b)

Impact of GFM on Distance Protection

❑ Case 3

Cases	S_{HVDC}	FL_{SG1}	GFM FRT	Fault (15%)
3	839 MVA	3000 MVA	VI	ABCG, 2 Ω

❑ Observations of Case 3

- Impedance locus perspective:
  - **GFL (CC-based FRT):** Oscillation of impedance locus observed with zone discrimination issues.
  - **GFM (VI-based FRT):** Impedance locus can keep stable with, thus avoid the zone discrimination issue in case 3.

- Angle difference of infeed from both sides of protective line:
  - **GFL (CC-based FRT):** undesired oscillation in $\Delta\psi$ due to the oscillating active and reactive current of GFM.
  - **GFM (VI-based FRT):** $\Delta\psi$ stays stable at -38.02°.

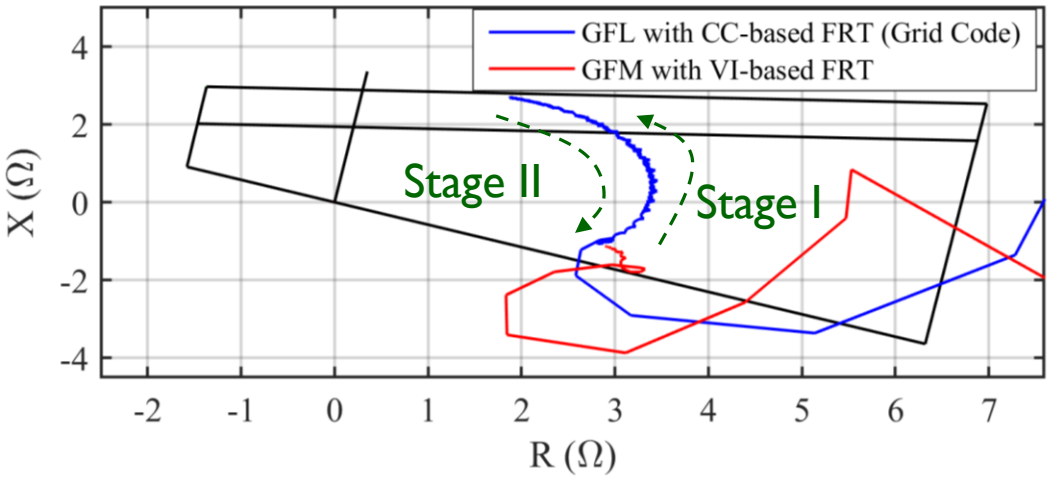

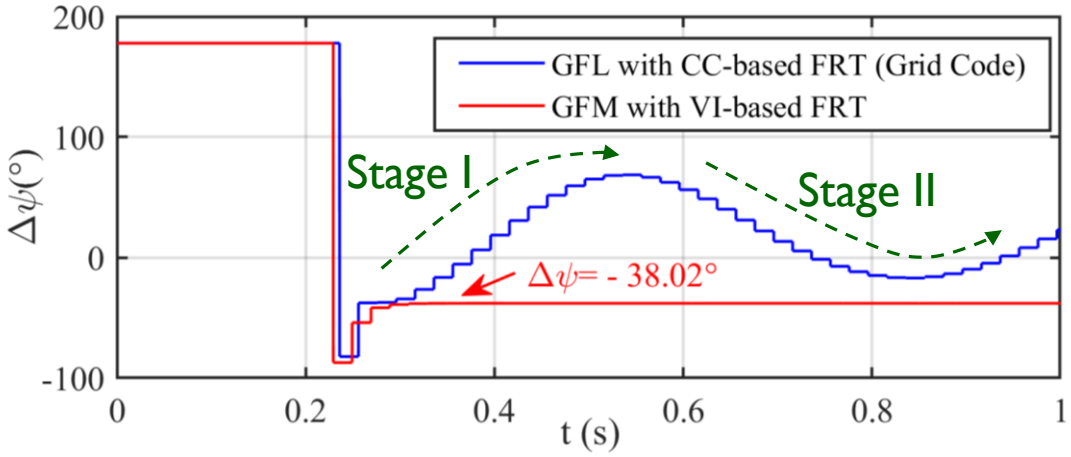

University of Strathclyde Glasgow

Travelling Wave Protection

Preliminary Test results

HIL Setup of Travelling Wave Protection Tests

Real-Time Simulation in Substep Environment

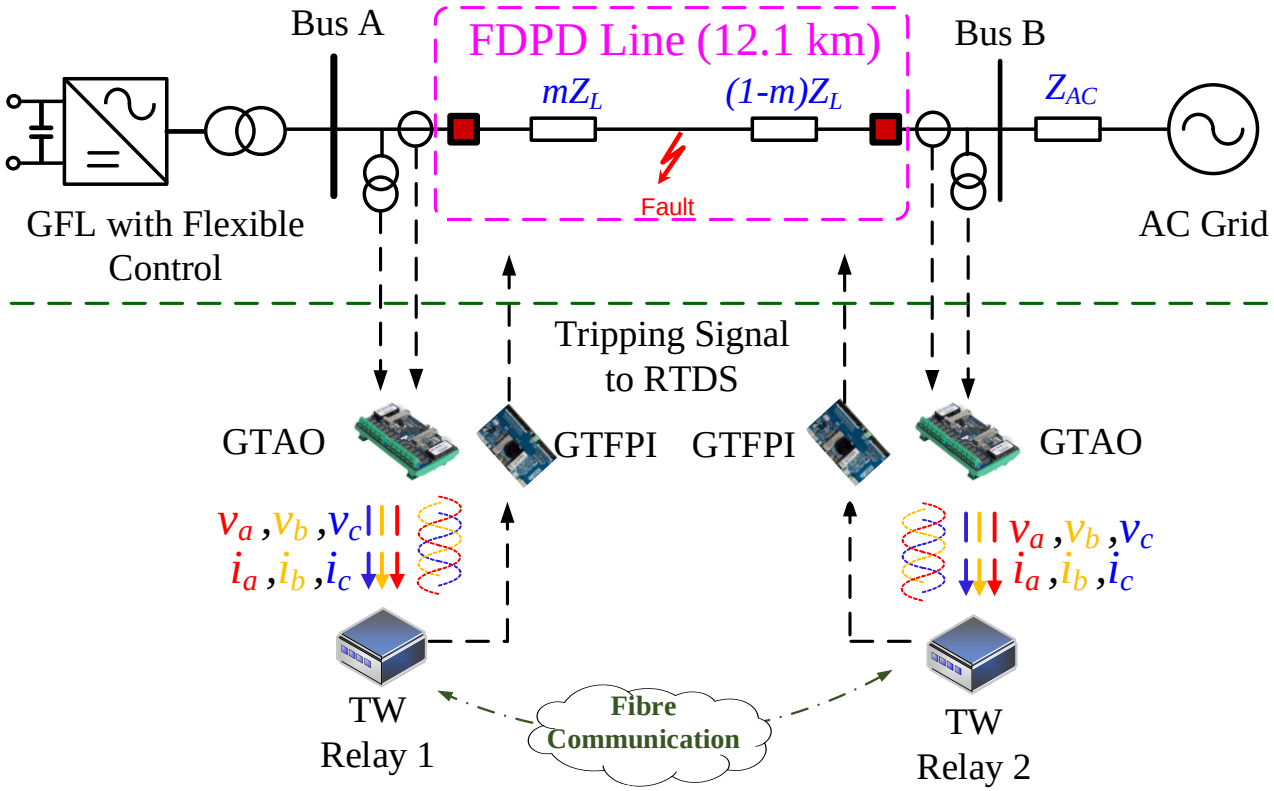

- Relays being tested: travelling wave differential protection.
- Network model developed in sub-step environment (6 μs step) in RTDS NovaCor simulator.
  - Transmission line modelled using Frequency-Dependent Phase-Domain (FPDP) line model.
  - A flexible controller emulating different control strategies deployed in the Grid-Following Converter (GFL)

Results of Travelling Wave Relay Tests

Relay Type	Converter Control	Fault Condition	HIL Results	Fault Location
Conventional Distance Protection	BI	AG, 15%, 2 Ω	Failed Trip	
		AB, 15%, 2 Ω	Failed Trip	
		ABCG, 15%, 2 Ω	Trip in false zone	
	CQ	AG, 15%, 2 Ω	Failed Trip	
		AB, 15%, 2 Ω	Failed Trip	
Travelling Wave Protection	BI	AG, 15%, 2 Ω	Trip with 5.6 ms	1.613 km (1.67%)
		AB, 15%, 2 Ω	Trip with 3.9 ms	1.661 km (1.27 %)
		ABCG, 15%, 2 Ω	Trip with 4.3 ms	1.691 km (1.02 %)
	CQ	AG, 15%, 2 Ω	Trip with 4.6 ms	1.658 km (1.30 %)
		AB, 15%, 2 Ω	Trip with 4.4 ms	1.665 km (1.24 %)

Observations:

1. Travelling wave relays always successful trip with small delays.

2. The travelling wave relay can locate the fault with high accuracy:

$$error\ (\%) = \left|\frac{D_{mea} - D_{act}}{L_{line}}\right| \times 100\%$$

3. Not appeared to be impacted by converter control.

4. Comprehensive studies by considering different factors are ongoing

* BI and CQ refer to the balanced current and constant reactive power controller

Voltage, Current and Lattice Diagram

Converter Control	Fault Condition	HIL Results	Fault Location
BI	AG, 15%, 2 Ω	Trip (5.6 ms)	1.613 km (Actual: 1.815 km) (Error:1.67 %)

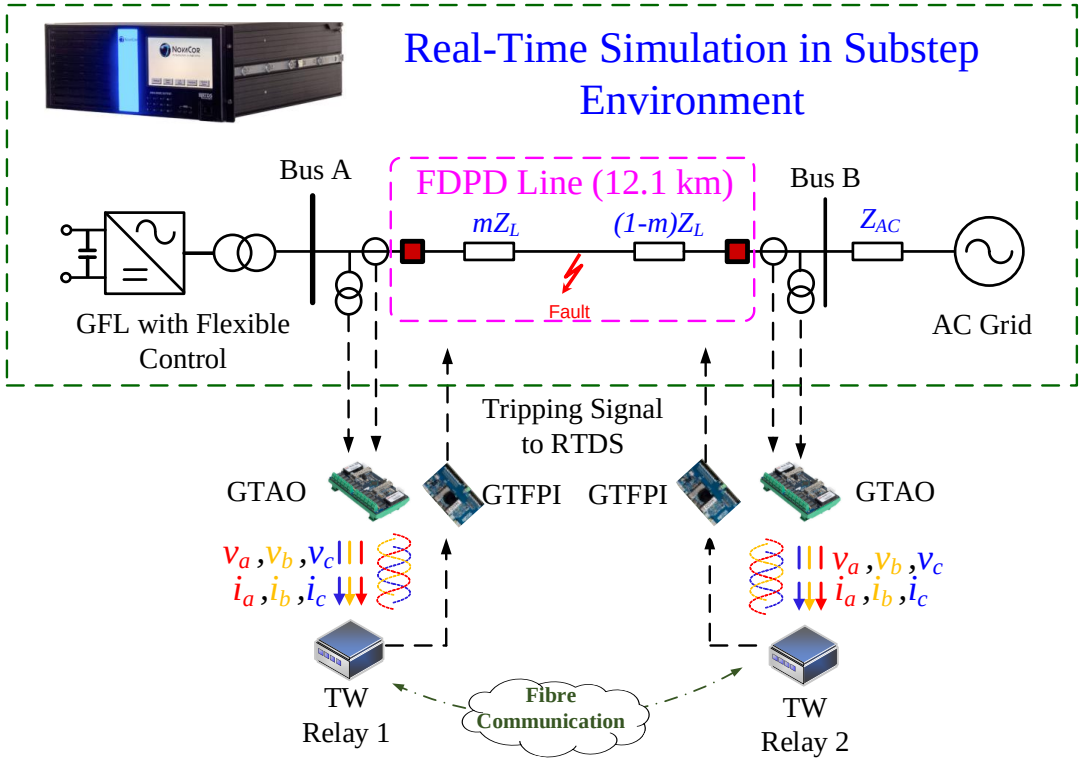

Injected Voltage and Current

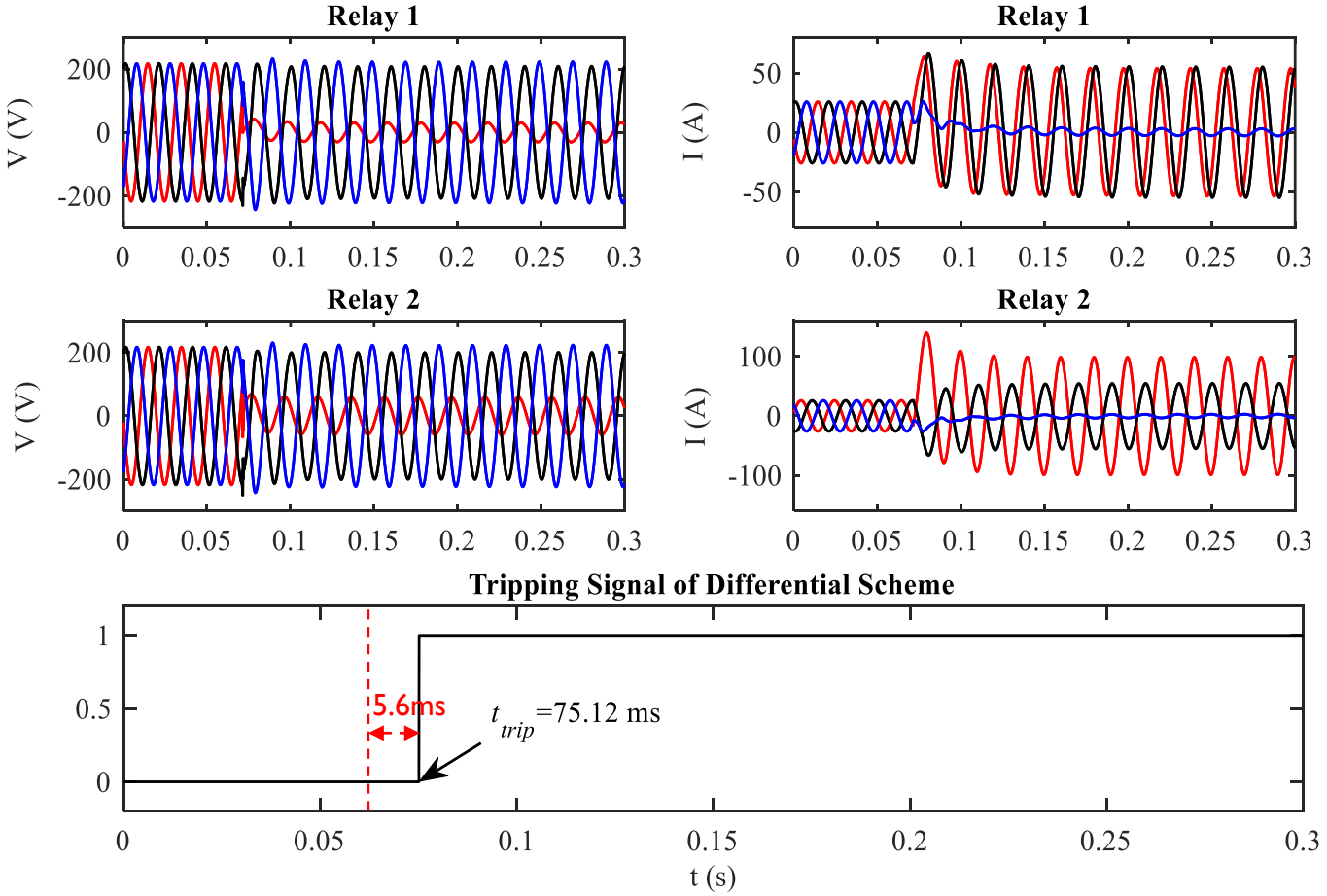

Traveling Wave Diagram Analysis

Converter Control	Fault Condition	HIL Results	Fault Location
BI	AG, 15%, 2 Ω	Trip (5.6 ms)	1.613 km (1.67 %)

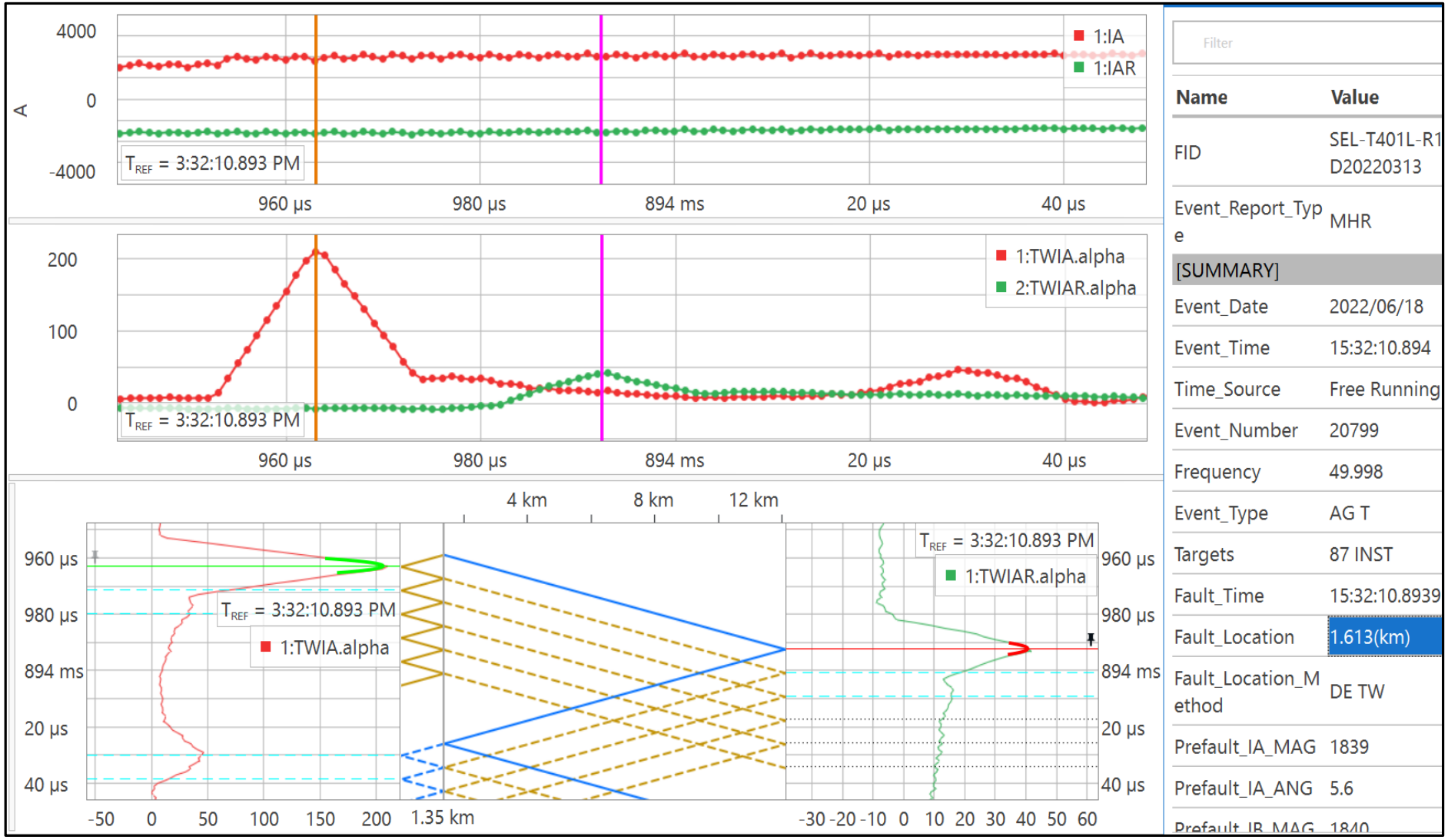

Filter

Name	Value
FID	SEL-T401L-R1 D20220313
Event_Report_Type	MHR
[SUMMARY]	
Event_Date	2022/06/18
Event_Time	15:32:10.894
Time_Source	Free Running
Event_Number	20799
Frequency	49.998
Event_Type	AG T
Targets	87 INST
Fault_Time	15:32:10.8939
Fault_Location	1.613(km)
Fault_Location_Method	DE TW
Prefault_IA_MAG	1839
Prefault_IA_ANG	5.6
Prefault_IB_MAG	1840

- I_A – current of relay 1
- I_{AR} – current of relay 2
- TWIA.alpha – Phase A alpha mode TW of I_A
- TWIAR.alpha – Phase A alpha mode TW of IAR

Conclusions

- Compromised distance protection performance observed when conventional voltage sources replaced by GFLs
  - Under/over-reach issues
  - Phase selection issues
  - Impedance measurement issues
  - Zone discrimination issues
- GFMs with VI FRT appears to improve the distance protection performance compared with GFLs CC-based FRT.
- Mitigation solutions: improved control, revised algorithm, new protection techniques.

Selected list of publications:

- D. Liu, **Q. Hong***, A. Dyśko, D. Tzelepis, G. Yang, C. Booth, I. Cowan, B. Ponnalagan, Evaluation of HVDC System's Impact and Quantification of Synchronous Compensation for Distance Protection, *IET Renewable Power Generation*, 2022
- A. Khan, **Q. Hong***, A. Dysko, and C. Booth A Communication-Free Unit Protection Scheme for Islanded Microgrids, *International Journal of Electrical Power & Energy Systems*, 2022
- S. Paladhi, **Q. Hong**, and C. Booth, Adaptive Distance Protection for Multi-Terminal Lines Connecting Converter-Interfaced Renewable Energy Sources, *IET 16th International Conference on Developments in Power System Protection,* 2022
- D. Liu, **Q. Hong**, A. Khan, A. Dyśko, A. Alvarez and C. Booth, Evaluation of Grid-Forming Converter's Impact on Distance Protection Performance, *IET 16th International Conference on Developments in Power System Protection,* 2022.
- K. Kawal, **Q. Hong**, S. Paladhi1, D. Liu, P. Papadopoulos, S. Blair and C. Booth, Vulnerability Assessment of Line Current Differential Protection in Converter-Dominated Power Systems, *IET 16th International Conference on Developments in Power System Protection,* 2022
- D. Liu, A. Dyśko, **Q. Hong,** D. Tzelepis, & C. Booth, (2022). Transient wavelet energy based protection scheme for inverter-dominated microgrid. *IEEE Transactions on Smart Grid*. https://doi.org/10.1109/TSG.2022.3163669

Thank you!

University of Strathclyde Glasgow

Dr Qiteng Hong

Senior Lecturer/Associate Professor

Department of Electronic and Electrical Engineering

University of Strathclyde

99 George Street, Glasgow G1 1RD, UK

- T: +44 (0) 141 444 7275
- M: +44 (0) 74 111 55818
- E: q.hong@strath.ac.uk